Product Specification

Type：BE-B355C-EC-05

Blauberg	Compilation	Check	Approved
	Ernest		
Customer	Proofread	Check	Approved

16/05/2025

Historical Version				
Version	Issued Date	Name	Condition	Change Content
V00	16/05/2025	Ernest	First Edition	/

Norminal Data

Type	BE-B355C-EC-05
Motor	EC102DC048V400W
Nominal Voltage	48VDC
Nominal Voltage Range	36～57VDC
Method of Obtaining Data	FA
Nominal Speed	1820±5%RPM
Max. Input Power	290W
Max. Input Current	6A
Sound level	80dB(A)
Min. Ambient Temperature	-25℃
Max. Ambient Temperature	60℃

ML=Max. load ME=Max. efficiency FA=Free Air

Technical description	
Weight	/
Packaging	/
Fan size (L×W×H)	355×355×166.5mm
Motor Size	102
Impeller Material	Aluminum Alloy
Number of Blades	6
Direction of Air Flow	All Around
Direction of Rotation	Clockwise, Viewed Toward Rotor
Rotor Surface	Plastic Spraying (Blue)
Rotor Housing	Stretch
Degree of Protection	IP44
InsulationClass	Class B
Min. Permitted Ambient Temp. for Motor (Transport/Storage)	-40℃
Max. Permitted Ambient Temp. for Motor (Transport/Storage)	+80℃
Min./Max. Humidity	5%～90%RH
Min./Max. Storage	5%～95%RH
Installation Position	Any
Cooling Holes/Cut-outs	Rotor Side
Mode	S1
Motor Storage	Ball Bearing
Technical Features	◆Control Input 0-10 VDC / PWM,PWM Max. Input Voltage 10VDC ◆Locked Rotor Protection ◆Termal Protection ◆Excessive Voltage Protection ◆Less Voltage Protection ◆Overcurrent Protection ◆Soft Start
Strength Class of Screws	8.8
Length of Cable	Standard 500±20mm
Dielectric Strength	500VAC/50Hz, 1 min, Leakage Current ≤10mA,No Breakdown Flashover
Touch Current According to IEC 60990	≤3.5mA
Conformity with Standards	CCC、CE、RoHS

Air Performance

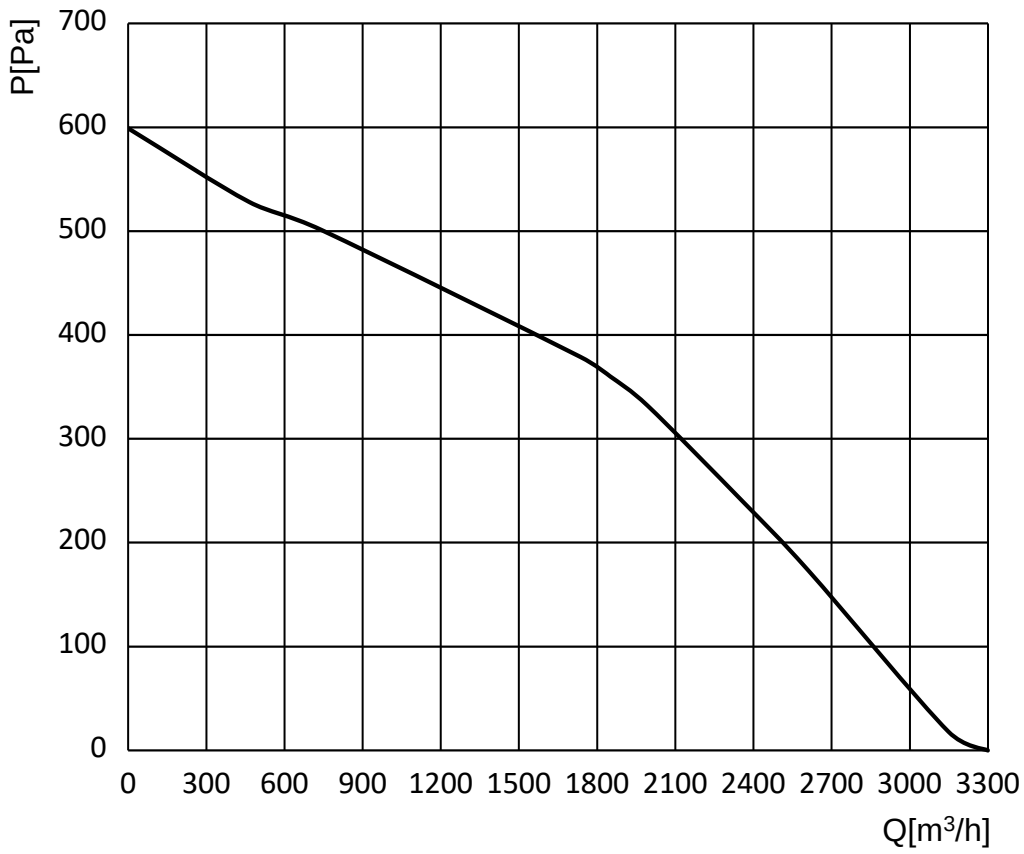

Air performance measured according to AMCA210/GB1236 installation category A. For detailed information on the measurement setup, contact Blauberg.The values given are valid under the specified measuring conditions and may vary due to conditions of installation. For deviations from the standard configuration, the parameters have to be checked on the installed unit.

Outline Drawing

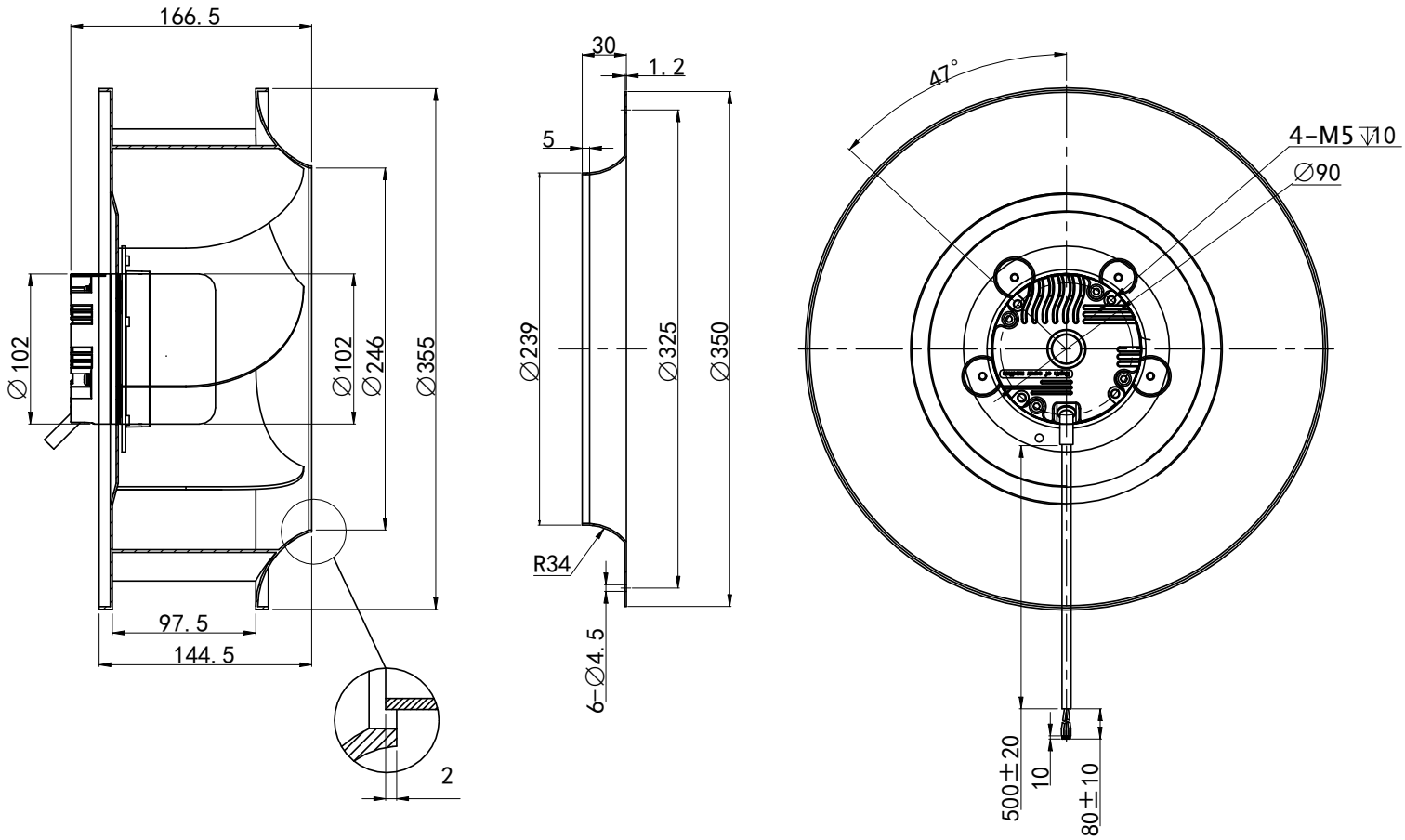

1	Accessory part : Inlet Ring
2	M5 Screw, Max. Screw-in Depth 10 mm;
3	Connect Line PVC 2×AWG14 , 2×AWG22

Wiring Diagram

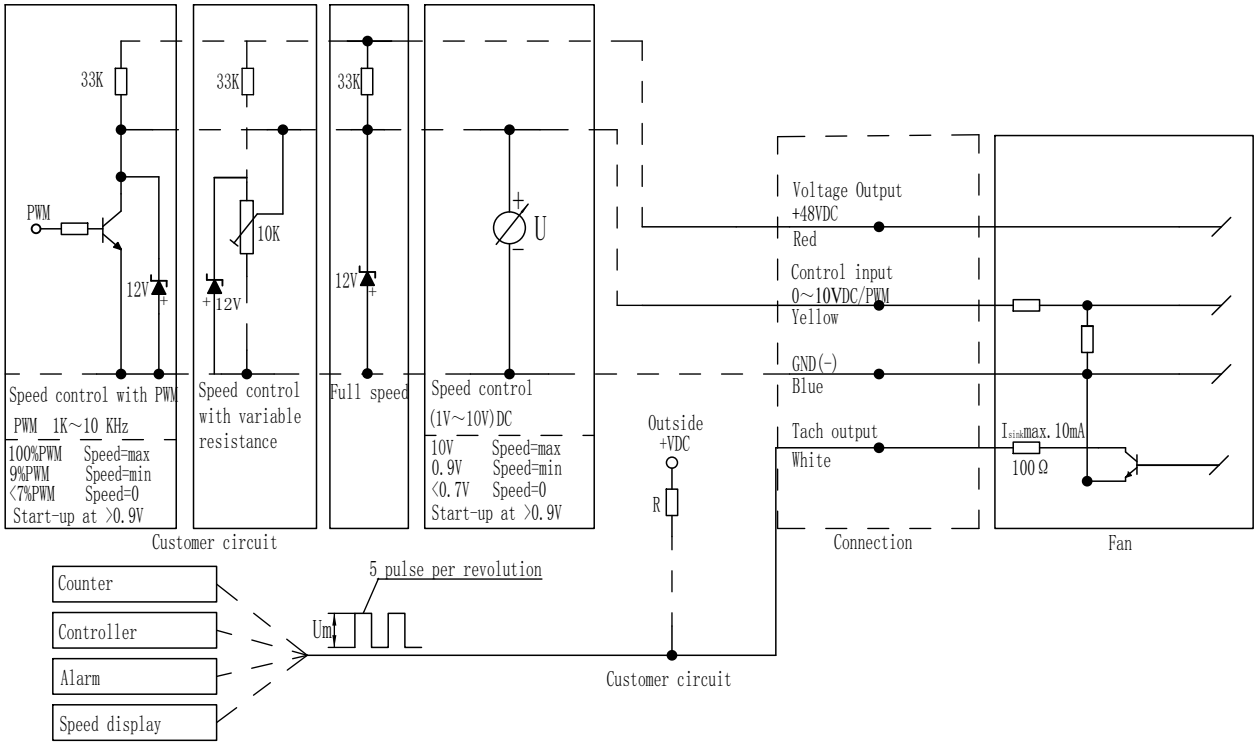

Line	Conn.	Designation	Colour	Function/Assignment
Power Line	U1	+	Red	Power supply,positive pole see nameplate for voltage range
	U2	GND	Blue	Power supply,GND see nameplate for voltage range
	U3	Speed Control	Yellow	0-10V/PWM(Max. amplitude of PWM 10V) control input;SELV
	U4	Signal Feedback	White	Tach output,5 pulse per revolution,(pulses can be customized,or changed to RD signal);SELV

Speed Setting

1.Voltage Control 0-10VDC(±0.2V)

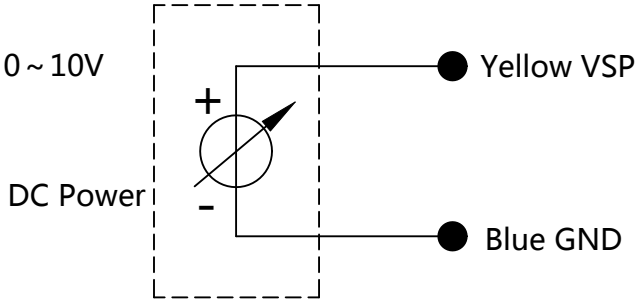

User DC power support 0～10VDC voltage
Voltage higher than 1.0V DC,fan start up
Voltage lower than 0.5V DC,fan stop
≥1.0VDC Fan start up

2.PWM Control,PWM duty 0%-100%(±2%)

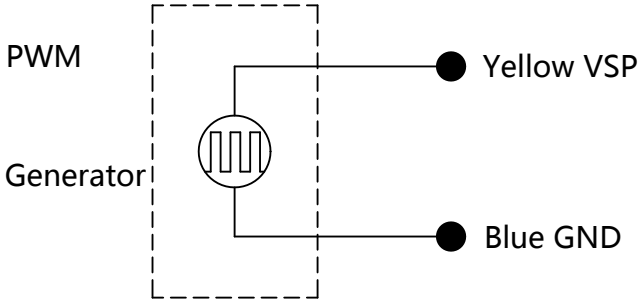

PWM duty control
PWM suggest amplitude:10VDC(±5%)
PWM Frequency:1KHz～10KHz
PWM duty higher then 10%,fan start up
PWM duty lower then 5%,fan stop
≥10% PWM duty,fan start up

Wiring Label

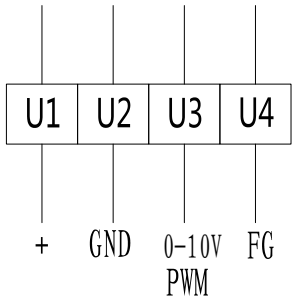

Wiring diagram for signal feedback

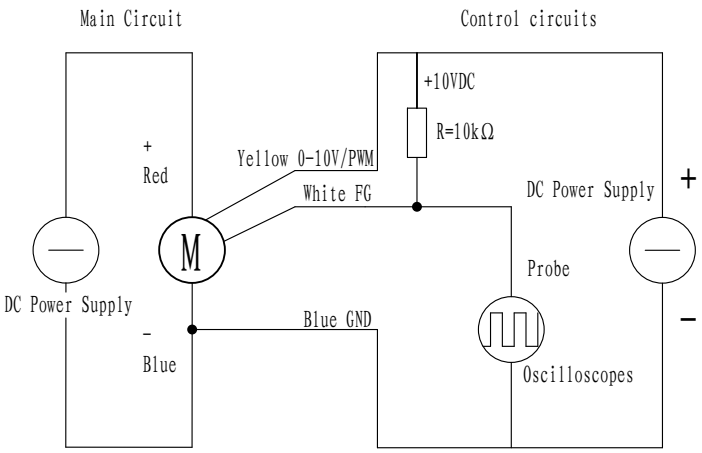

The fan provides a speed output signal, utput signal drawing see under annex.
Vfg and pull up resistor are connected by customer.
Vfg=(3.3-30)VDC, R⩾1000×(vfg)Ω

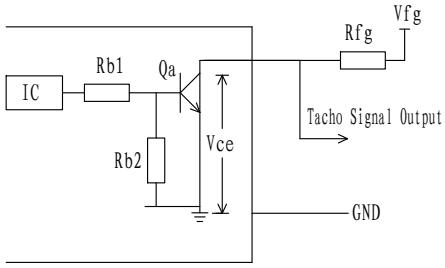

Speed Calculation
n=60f/a ;
n=Fan speed
a=Pulse (Several Pulse/Revolutions)
f=Signal Output waveform frequency

Note

1	The power line and control line of the fan should be connected in strict accordance with the wiring diagram to prevent the fan from burning out;
2	Do not connect the white signal wire directly to the red signal wire or the external DC power supply;
3	If the fan does not work after starting, please check the input voltage of the speed regulation, which may be improperly connected. To prevent hand or other personal injury caused by sudden start of the fan; Do not touch the impeller or rotor after electrifying;
4	It takes a few seconds for the fan to start after power on. In order to prevent personal injury, do not touch the impeller or rotor under the condition of electrifying or low speed operating;
5	Before turning on the power, please check whether the motor is installed reliably, otherwise it will cause the motor to burn and personal accidents;
6	It is forbidden to pull the power cord too hard,If the power cord is damaged, the power cord must be replaced by the manufacturer to avoid electric shock accidents;
7	It is forbidden to drop or crash the motor;
8	It is strictly forbidden to flush the motor to prevent leakage accidents caused by reducing the insulation performance of the motor and endangering personal safety;
9	If you need to use special customized products for purposes other than the agreed working conditions, please consult our company first and confirmto use;
10	After the fan operation stops, the temperature of the motor casing may be high in a short period of time, please avoid direct release. Protect if necessary Measures to prevent burns;
11	When installing the equipment, pay attention to check the casing and other shells, no debris can fall in, and clean up the inside if necessary;
12	Before the equipment is installed and running, the rotor should be pulled by hand to confirm that there is no collision, interference or jamming before it can be powered on;
13	As a part of the fan, the motor cannot be used alone without impeller or load;
14	After the product packaging has been disassembled, it should be repackaged if it needs to be kept instorage. The product shall be stored in a clean, well-ventilated warehouse with ambient temperature of -40℃~+80℃, relative humidity of no more than 95%, no corrosive gases in the air, and 15cm above the ground. ;
15	Please install the fan out of the reach of children and do not allow children to use this product;
16	The final interpretation right of this specification belongs to Blauberg.

Life and maintenance, warranty

1	The design life of the fan is 50,000h, which is limited by the life of the ball bearing at 40°C of 50,000h. The actual service life of the fan will vary depending on the temperature, humidity, installation method, fan load and other conditions of the use environment;
2	According the environment, it is recommended to clean and maintain the fan every 3~6 months;
3	From the date of purchase (subject to the delivery date of the order), the warranty period of the whole machine is two year, during this period, the company provides free replacement or repair for the failure and damage caused by the quality problem of the product itself. If the damage is caused by undue disassembly, handling, man-made damage or natural disasters and other force majeure, it is not covered by the Blauberg's warranty.